Real-Time Hardware-in-the-Loop (HIL) Testing for Power Electronics Controllers

Seung Tae, Cha, Qiuwei Wu, Arne Hejde Nielsen, Jacob Østergaard
Department of Electrical Engineering
Technical University of Denmark (DTU)
Kgs. Lyngby, Denmark

In Kwon, Park
RTDS Technology Inc
Winnipeg, Canada

***Abstract*— This paper discusses general approaches and results of real-time hardware-in-the-loop (HIL) testing for power electronics controllers. Many different types of power electronic controllers can be tested by connecting them to a real-time digital simulator (RTDS) for closed-loop HIL testing. In this paper, two HIL digital controller tests are presented as application examples of the low-level signal interface in the closed-loop tests of power electronic controllers. In the HIL tests, the power system and the power electronics hardware are modeled in the RTDS. The required control functions of the power electronics hardware are not included in the RTDS. Instead, the control algorithms are coded using the native C code and downloaded to the dedicated digital signal processor (DSP)/microcontrollers. The two experimental applications illustrate the effectiveness of the HIL controller testing. Results of the HIL tests and hardware validations are presented to illustrate the real-time HIL testing method for power electronics controllers.**

Keywords-Hardware-in-the-loop (HIL), power electronics controllers, real time digital simulator (RTDS), digital signal processor (DSP)

I. INTRODUCTION *(HEADING 1)*

The technology of power electronics has become a large, complex and multi-disciplinary field of electrical power engineering. The main reason of this is due to the fast development in power semiconductor devices, electric machines, electric power, and control techniques, and various real-time simulation tools [1-2]. Power semiconductor devices constitute the main stream of modern power electronic equipment. They are used in power electronic converters in the form of a matrix of on-off switches, and help convert power from AC-to-DC, DC-to-AC, etc.

Converters are widely used in applications such as heating and lighting controls, AC and DC power supplies, DC and AC motor drives, and static VAR generation. The impact of power electronics in modern society will be as important and versatile as that of information technology today. This trend of widespread impact of power electronics is inevitable and at the same time creates new challenges to traditional power system and power electronic engineers [3-4]. Power electronic engineers are increasingly interested in incremental prototyping of control systems of power electronics equipment, in which HIL testing plays a significant role [5-9].

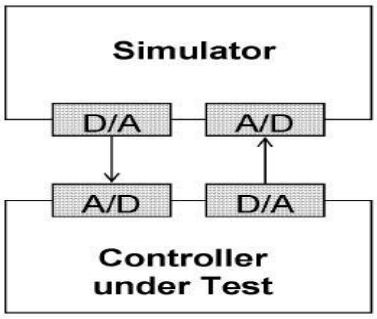

Fig. 1 Typical topology of the controller HIL

A typical topology of controller HIL tests for power electronics controllers is illustrated in Fig. 1. As an advanced design/test method, the HIL test allows the prototype of a novel apparatus to be investigated under a wide range of realistic conditions repeatedly, safely and economically. Most of the existing applications involve controllers to be investigated as the hardware under test. In these tests, all the signals exchanged between the real-time digital simulator (RTDS) and the hardware are at low power levels typically within a range of +/-5~10V and can be easily implemented by analog/digital converter or digital/analog converter with the acceptable degree of high accuracy.

Digital signal processors (DSPs) are a key technology enabling electrical drive systems to be smoother, more efficient, more reliable and more cost effective. The processing power of DSP controller is allowing the accurate control of power converters [10-11]. Therefore, they provide an appealing solution. In this paper, the digital controller (external) is realized by using the TI TMS320C28x DSP. This processor is highly integrated, high-performance solution for demanding control applications.

The objective of this paper is to implement the real-time HIL testing of a digital controller for a DC-DC buck converter and DC-AC converter. The hardware validation of embedded control was implemented for the two converters. The control algorithms are coded and then downloaded to the dedicated

Authorized licensed use limited to: Universidade Tecnologica Federal do Parana. Downloaded on March 16,2026 at 01:48:58 UTC from IEEE Xplore. Restrictions apply.
978-1-4577-0547-2/12/$31.00 ©2012 IEEE

DSP/microcontrollers. The digital controllers calculate the reference voltage/current and the corresponding duty cycle for each channel, and also output PWM switching signals. Fig. 2 depicts the schematic diagram of this signal interface of power electronics applications. In this schematic diagram, the buck voltage converter and DC-AC converter are modeled in RTDS respectively, and the associated digital controllers are implemented on the DSP using the native C code.

The rest of the paper is arranged as follows. Section II mentions the background of integration trend of the power electronics technology with RTDS environment. Section III discusses the application examples. Results of the study and discussions are presented in Section IV. In the end, a brief conclusion is drawn in Section V.

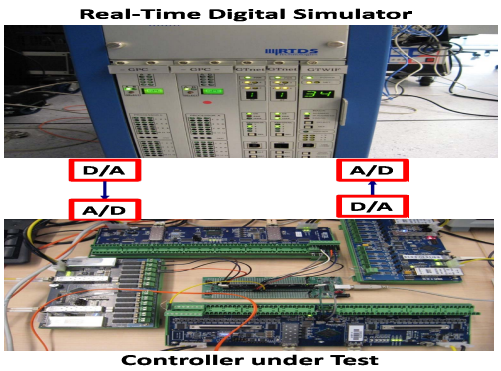

Fig. 2 Power electronics experiment setup with RTDS

II. Integrating Power Electronics with RTDS

During the past three decades, digital control in power electronics has been intensively used. The increasing performance and cost reduction of digital circuits has enable their application for power converters control. Their control algorithms can now be implemented on off-the-shelf product lines of experimenter's kit which makes the development process time shorter and most importantly, cheaper. This kit is suitable for engineering development, demonstration, or laboratory evaluation purposes with particular attention to HIL experimental work within the university environment.

The RTDS simulator has also been used by many utilities, independent system operator (ISO), manufacturers, research institutes, and universities for well over two decades to test a wide variety of power system controls including HVDC, FACTS, generator controls, distributed generation, and smart grid. Since the simulation runs in real-time, the digital controller can be connected in closed-loop with power system model. The closed-loop HIL of the controller and the network model provides insight on both the performance of the control scheme as well as its effect on the power system. Hence, HIL simulation is an effective method to test new control systems or prototype power electronic systems that require digital switching firing signals that are normally provided by a digital controller [12-13].

As illustrated, it is even easier nowadays: powerful C and C++ compilers are available, which remove the need to code in assembly, speeding the development process. Before the field implementation of the control, RTDS-HIL tests could be a very useful intermediary step in order to take its real constraints into account.

III. HIL Test Setup for DC Buck Converter and DC-AC Inverter

A. Buck Converter

The buck converter is a high effeiciency step-down DC to DC switching converter (i.e. change DC electrical power efficiently from one voltage level to a lower regulated voltage). The easiest way to reduce the voltage of a DC supply is to use a linear regulator. A linear regulator uses a resistive voltage drop to regulate the voltage, losing power in the form of heat. Buck converter, on the other hand, uses a switch, a diode and an inductor to transfer energy from input to output of the converter. Because of this, the energy is stored and can be recovered in the discharge phase of the switching cycle. This results in a much higher efficiency. Some types of converter achieve an efficiency of over 95%, using the latest technologies.

The operation of the buck converter is straightforward. It alternates between connecting the inductor to source voltage to store energy in the inductor and discharging the inductor into the load. A basic buck configuration is depicted in Fig. 3.

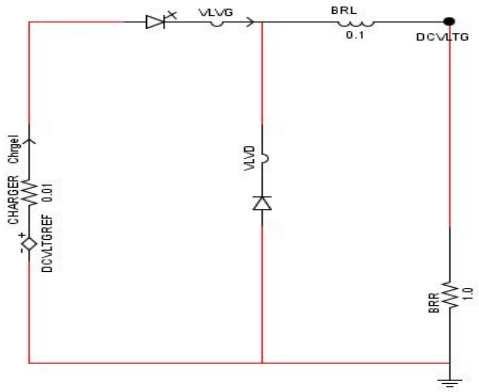

Fig 3. Basic circuit of buck converter

There are only three main components - switch, diode and inductor. A control circuit (implemented on DSP) monitors the output voltage, and maintains it at the desired level by switching on and off at a fixed rate, but with a varying duty cycle. Assuming that the switch is on, current begins flowing from the input source through the inductor, and then into the load. Therefore, the magnetic field in the inductor builds up, storing energy in the inductor with the voltage drop across the inductor opposing or bucking part of the input voltage. If the switch is off, the inductor opposes any drop in current by

Authorized licensed use limited to: Universidade Tecnologica Federal do Parana. Downloaded on March 16,2026 at 01:48:58 UTC from IEEE Xplore. Restrictions apply.

suddenly reversing its EMF, and now supplies current to the load via a diode. The DC output voltage which appears across the load is a fraction of the input voltage, and this fraction turns out to be equal to the duty cycle.

$$V\,out\,/\,V\,in = D \qquad (1)$$

where D is a scalar called the duty cycle, and is equal to Ton / T is the inverse of the operating frequency.

By varying the switching duty cycle, the buck converter's output voltage can be varied as a fraction of the input voltage [14-15].

This will be demonstrated by constructing the model in RSCAD (e.g. power electronics, duty ratio order, modulation wave generator, DC-DC converter control, etc) which is shown in Fig. 4. The blocks from the RTDS library are used to represent algorithms (i.e. PWM gate pulse according to the given duty ratio command) and peripheral specific to the TMS320C28x DSP family.

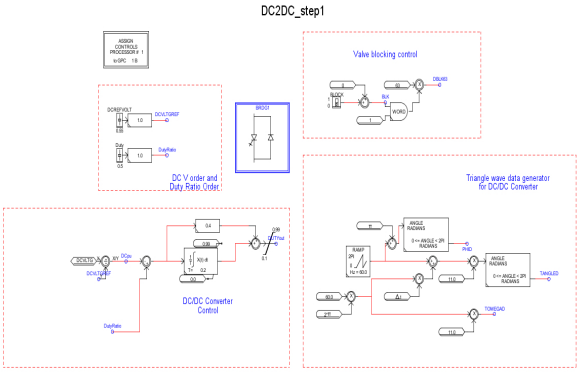

Fig. 4. Implementation of buck converter

B. DC-AC Inverter

The DC-AC inverters are electronic devices commonly used to produce AC power from low voltage DC energy from batteries, fuel cells, or solar panels. They convert the incoming DC into AC, and then they step up the resulting AC to mains voltage level using an appropriate transformers. They have no moving parts and are used in a wide range of applications, from small switching power supplies in computers, to large electric utility HVDC applications that transport bulk power from off-shore to the main grid. With HVDC transmission, an inverter in a static inverter plant converts the power back to AC at the receiving end.

The ultimate goal is to have the inverter perform these functions as efficiently as possible so that the much energy drawn from the battery or HVDC is converted into AC power. The power wave is not exactly pure sine wave output as from the power grid. It has a waveform that appears as a choppy squared-off wave or rectangular pulses. In this type of inverter it is not feasible to control the peak-to-peak output, because this is largely fixed by the battery voltage and the transformer's step-up ratio. So, the regulation is achieved in a different way by varying the width of the rectangular pulses, to control and hence the RMS value of the output voltage. This is called pulse width modulation (PWM). If larger magnitude of AC output is required, the inverter's control circuitry (implemented on DSP) acts to increase the amplitude of modulation index, thus producing the desired output.

The basic circuit configuration used in DC-AC inverter is shown in Fig. 5. As explained earlier, most DC-AC inverters deliver a modified sine-wave output voltage. Because of the bridge configuration (2-level bridge), the alternating pulses output waveform is also relatively rich in harmonics [16-17].

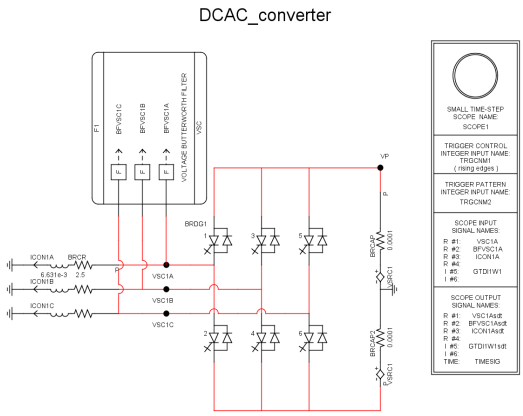

Fig. 5. Basic circuit of DC-AC inverter

The operation of a simple 2-level bridge based DC-AC inverter is demonstrated by constructing the model that includes the high voltage components (e.g. power electronics, 2 level bridge model, 2 order butter worth filter, modulation wave generator, small time step oscilloscope, etc). The model is built by using blocks from the RTDS library which are used to represent algorithms (i.e PWM gate pulse) and peripheral specific to the TMS320C28x DSP family. The built model is shown in Fig. 6.

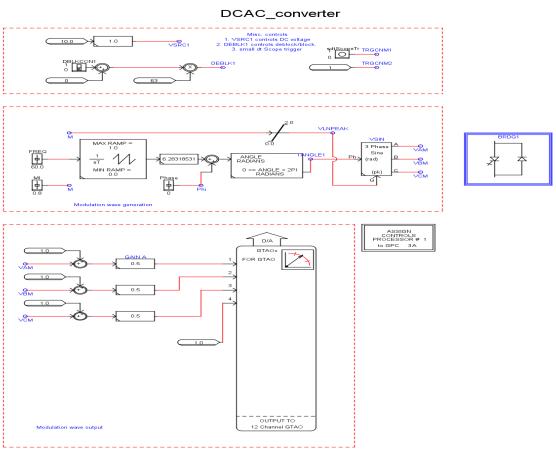

Fig. 6. Implementation of 2-level DC-AC inverter

Authorized licensed use limited to: Universidade Tecnologica Federal do Parana. Downloaded on March 16,2026 at 01:48:58 UTC from IEEE Xplore. Restrictions apply.

C. Controller Implementation

1) Control Algorithm for Buck Converter:

The buck converter is controlled in real-time using a dedicated TI digital signal controller. The control algorithm, shown in Fig. 7, is coded and downloaded to the DSP.

The buck converter includes PWM controlled switch and diode, and produces a regulated DC voltage. A resistor bank serves as a load. The output voltage varies with the loading conditions. The output voltage is measured using AD channel, and is used as input to a PI control law to compute the duty ratio of the output PWM signal. The measured output voltage signal & duty ratio value is sent to the controller through the output channel of GTAO card. A fixed reference signal is also obtained from the RTDS. C code blocks which drives PWM peripherals on the DSP, provide the interface to the GTDI card. Runtime module enables the user to monitor input and output signals while the system is running. The control signals from the discrete proportional-integral controller is sent to the PWM module on the processor and its resulting PWM gating signal is sent through the input channel of GTDI.

2) Control Algorithm for DC-AC Inverter:

The DC-AC inverter is also controlled in the same manner using a dedicated TI digital signal controller. The control algorithm is coded and downloaded to the DSP. Its control algorithm can be altered and parameters can be set very conveniently via a user interface software (Code Composer Studio) on an external PC. The usual method of firing a two level bridge is with PWM, where the switching devices turn on and turn off at high frequency. This method produces a fundamental ac waveform as well as harmonics at the switching frequency and above. Both the magnitude and phase of the ac waveform at the internal nodes are controlled by the switching pattern [16-18].

The purpose is to explore the capability and limitation of 2-level bridge model and is chosen only to serve as a reasonable example. The firing pulse input to the RTDS is fed through the GTDI card. The GTDI card has 64 channels and provides optical isolation between the controls and the RTDS. One GTDI card was used for providing direct communication to the processors simulating the respective converters [17].

IV. HIL Test Results for DC-DC Buck Converter and DC-AC Inverter

I. HIL Test Results for DC-DC Buck Converter

In order to accurately test the performance of the control algorithm implemented on the DSP, a real-time HIL test was conducted with RTDS. As illustrated in Section III, the buck converter with gating pulse generator, which outputs the gating pulse through the GTDI card. The results of real-time simulation are shown in Fig. 8.

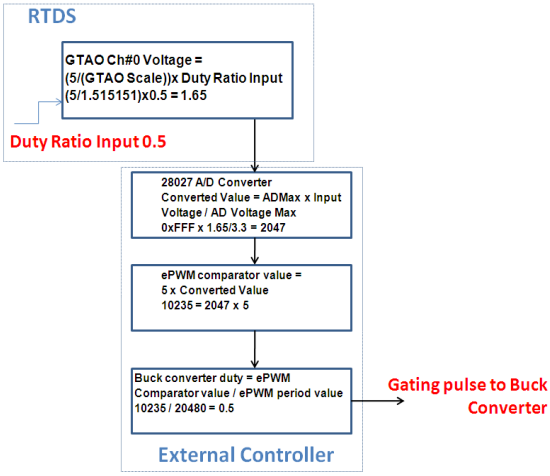

Fig. 8. Buck converter simulation with external control

This is a direct result from the C code block calculates the reference voltage based on the corresponding duty ratio (i.e initially set to 50% duty ratio), and sends out the PWM switching signals. In this case, the controller adjusted the output of DC voltage to desired value, 0.5006 pu based on the duty ratio order, 0.5 from RTDS, which is defined as 5 divided by GTAO scale value times the duty ratio order. This value (1.65) goes into A/D converter where A/D converter input range is from 0 to 3.3V (i.e duty ratio 0 is 0V & duty ratio 1 is 3.3V, respectively), and converted to the value of 2047. Again, the PWM value (10235) is calculated by multiplying 5 to the converted value. Then, the buck converter's duty (0.5) is defined as the ratio of PWM value (10235) to PWM period value (20480). The duty ratio order can also be easily monitored using the front panel analog outputs on GPC card #1A channels 1 through 8. This experiment was chosen to proof the concept of HIL capability of RTDS.

II. HIL Test Results for DC-AC Inverter

This case deals with the difficulties of testing gating pulse for a DC-AC inverter. The main goal is to provide low latency, closed-loop interaction between the gating pulse controls and the simulator for PWM gating signals in the range of 1 kHz [18].

The closed-loop HIL setup is used to verify and improve the performance of the power electronic controller. Therefore, the RTDS must provide an accurate representation of the actual DC-AC inverter. The HIL testing was performed for a simulation time step of 50µs for the main network, but for the power electronic switches with a time step shorter than 3µs. If the sampling frequency should be at least two orders of magnitude larger than, the permissible switching frequency of the modeled power electronic switches increases from 200 Hz in the 50µs environment to 5,000 Hz in the 2µs environment. The following are the graphs obtained during the HIL test. The results in Fig. 9 are showing the steady state operation.

Authorized licensed use limited to: Universidade Tecnologica Federal do Parana. Downloaded on March 16,2026 at 01:48:58 UTC from IEEE Xplore. Restrictions apply.

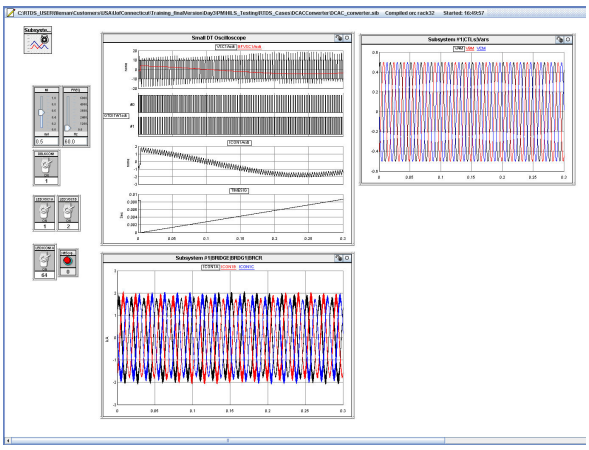

Fig. 9. DC-AC steady state operation

Comparison of output voltage signal (top) is shown in Fig. 10 where black waveform represents 2 level bridge small time step voltage output while red waveform represents filter value of voltage. In Fig. 10, the middle graph shows the gating signal from the controller. In addition, Fig. 10 (bottom) shows the zoomed sample time revealing the fine detail and paramount importance of small time step in RTDS (i.e 1.47 µs time step matching with input order which is determined by controller).

It can be seen that the sample time is exactly same as small time step. The small time step approach makes it possible to test power electronics controller for 2-level DC-AC bridge with PWM frequencies in excess of 3 kHz. Due to the predefined topology of 2-level bridge models, the bridge output terminal voltages tend to have a certain amount of harmonics in them. Some of these high order harmonics were filtered by the circuit inductance using, but not completely as shown in Fig. 11. It should be noted that the goal is to explore the possibility of utilizing the RTDS in a simple DC-AC conversion experiment and is chosen only to serve as a reasonable example rather than satisfying technical solutions. Using a 3-level bridge model would give much better results as compared to the 2-level model.

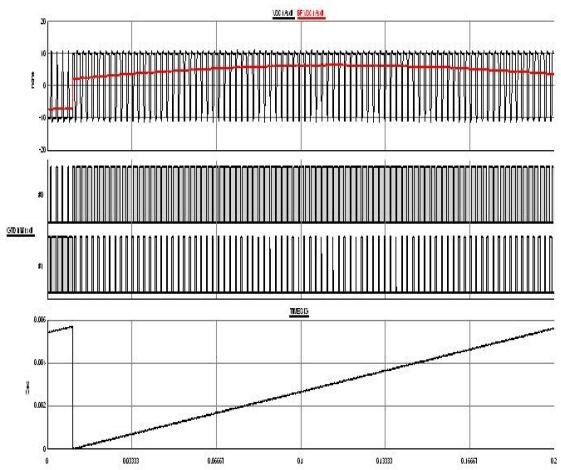

Fig. 10. Zoomed in voltage (top), gate signal (middle) & sample index (bottom) from Fig. 2

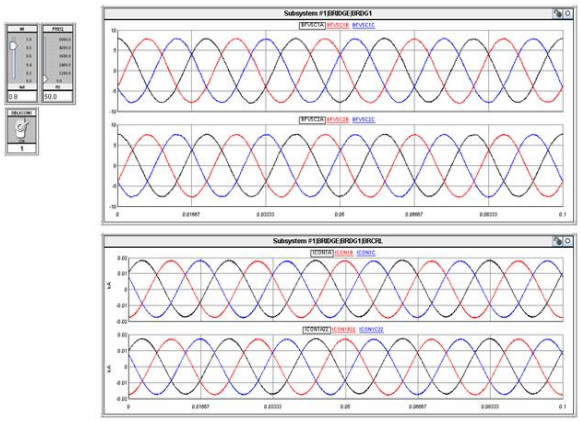

Fig. 11. Bridge output terminal voltage, BW filter (top) & branch current (bottom)

It should be also noted that PWM index is limited to values less than 1 (0.8) because the non-linear effect of over modulation is out of study scope.

V. CONCLUSION

In this paper, two HIL power electronics controller tests are presented. To efficiently evaluate the effectiveness of power electronics controllers, the HIL test is beneficial. The control algorithm implemented on a dedicated DSP is tested in real-time with the system models built in the RTDS. The behaviors of the buck converter and DC-AC inverter are studied. Results of HIL tests and hardware validations suggest that the control algorithms correctly regulate the power converters in simulation. This proves to be an effective tool for real-time HIL testing of power electronics controllers. This application of real-time simulation environment would also serve as an intermediary step during the development of the end product, potentially reducing the development cost and experimental risk, which are associated with the destroyed power stage. Also, the RTDS provides an interactive learning environment. Users are able to follow their engineering intuition and in turn increase their understanding of the system or alternatively identifying and solving some engineering problems, particularly in the area of power electronics.

REFERENCES

[1] B. K. Bose, "Power Electronics and Motor Drives Technology Advances, Trends and Applications," *IEEE International Conference on Industrial Technology, 2005,* pp. 20-64.

[2] B. K. Bose, "Power Electronics and Motor Drives Recent Progress and Perspectives," *IEEE Transaction Industrial Electronics, Vol. 56, No. 2, 2009,* pp. 581-588.

[3] I B. K. Bose, *Modern Power Electronics and AC Drives, Prentice Hall, 2001.*

[4] B. K. Bose, "Energy, Environment, and Advances in Power Electronics," *IEEE Transaction Power Electronics, Vol. 15, No. 4, 2000,* pp. 688-701.

[5] Roger. A. Dougal, "Design tools for electric ship systems," *IEEE Electric Ship Technologies Symposium, 2005,* pp. 8-11.

Authorized licensed use limited to: Universidade Tecnologica Federal do Parana. Downloaded on March 16,2026 at 01:48:58 UTC from IEEE Xplore. Restrictions apply.

[6] I. Leonard. T. Baldwin, "Accelerating the customer-driven microgrid through real-time digital simulation," *IEEE PESGM, 2009,* pp. 1-3.

[7] Jian Wu, Yong Cheng, "Hardware in the loop test for power system modeling and simulation," *IEEE Power System Conference & Exposition, 2006,* pp. 1892-1897.

[8] W. Ren, M. Steurer, "Progress and challenges in real time hardware-in-the loop simulations of integrated ship power systems," *IEEE PESGM, Vol. 1, 2005,* pp. 534-537.

[9] S. L. Woodruff, "Hardware-in-the-loop testing of 5MW prototype electric propulsion motors," *Advanced Naval Propulsion Symposium, 2004,* pp. 1-3.

[10] Z. Liu, Q. Song, "Real-time digital simulation for a 50Mvar cascaded multi-level STATCOM", *International Conference on power system technology,* 2006, pp. 1-6.

[11] W. Zhang, Y. Yu, "TMS320F2812 DSP Driving system based on power electronics integration technology", *International Conference on Signal Processing,* 2006, pp. 1-4.

[12] D. Petru and D. Radu, "Digital control applications using TI digital signal controller", *WSEAS Transactions on Systems & Control,* Vol. 3, pp. 558-568, Jun. 2008.

[13] National Instrument, Labview FPGA hardware in the loop simulation applications, On-line tutorial document, Dec 2008.

[14] Jaycar Electronics, DC-DC converters, in reference data sheet, 2001.

[15] Wikipedia (2011) [Online] Available: http://en.wikipedia.org/

[16] S. Nitish, "A model of the static synchronous series compensator for the real-time digital simulator", *in Proc. 2005 IEEE International Conference on Future Power Systems,* pp. 6-12.

[17] RTDS Technologies Inc, Real-Time Digital Simulator Tutorial Manual, *RSCAD Version 2.020,* March 2008.

[18] P. A. Forsyth and T. L. Maguire, "Testing Firing Pulse Controls for a VSC based HVDC scheme with a Real Time Step < 3 µs", *in Proc. 2009 International Conference Power System Transients*, pp. 1-6.

Authorized licensed use limited to: Universidade Tecnologica Federal do Parana. Downloaded on March 16,2026 at 01:48:58 UTC from IEEE Xplore. Restrictions apply.